THIS DRAWING AND THE INFORMATION CONTAINED WITHIN IT ARE CONFIDENTIAL AND MAY NOT BE COPIED OR DISCLOSED WITHOUT THE WRITTEN PERMISSION OF LITTELFUSE.

REVISIONS				
ZONE	REV.	DESCRIPTION	DATE	APPROVED
	A	GCF#524667 INITIAL RELEASE	AUG./25/2021	D. ZHANG

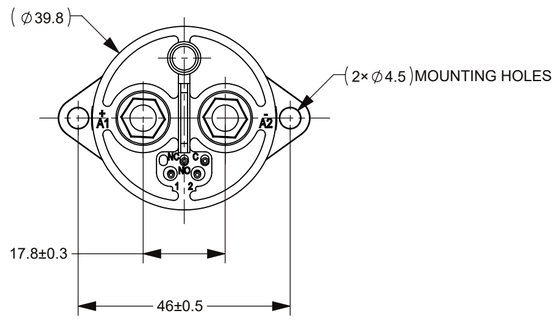

CIRCUIT SCHEMATIC DIAGRAM

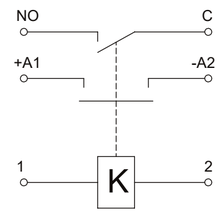

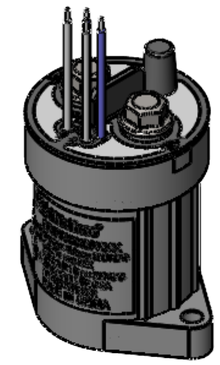

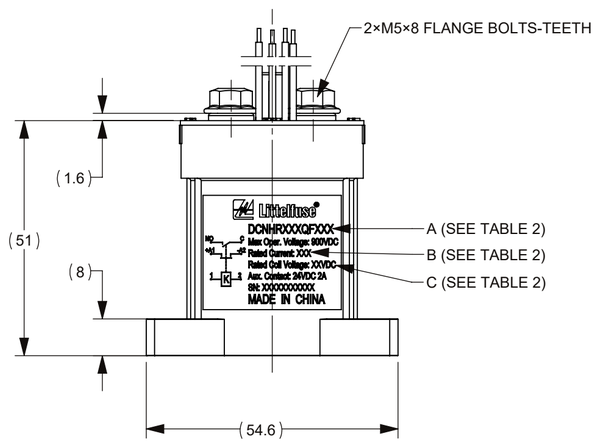

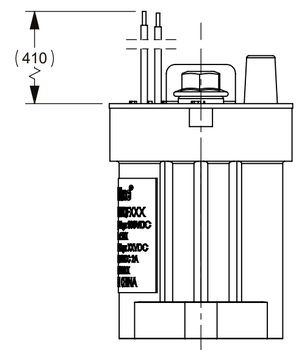

TABLE 1: TECHNICAL PARAMETERS							
ITEM		PARAMETER					
		DCNHR100QF12	DCNHR100QF24	DCNHR100QF48	DCNHR50QF12	DCNHR50QF24	DCNHR50QF48
RATED COIL VOLTAGE		12V DC	24V DC	48V DC	12V DC	24V DC	48V DC
OPERATING VOLTAGE IN COLD STATE AT (20±5) °C	PICKUP (V DC)	MAX 8.4	MAX 16.8	MAX 33.6	MAX 8.4	MAX 16.8	MAX 33.6
	RELEASE(V DC)	MIN 1	MIN 2	MIN 4	MIN 1	MIN 2	MIN 4
PICK-UP TIME		MAX 25ms					
RELEASE TIME		MAX 12ms					
BOUNCE TIME		MAX 7ms					
MAIN CONTACT RESISTANCE (@ 20A)		MAX 2mΩ					
AUX. CONTACT RESISTANCE (@ 100mA)		MAX 500mΩ					
DIELECTRIC STRENGTH (LEAKAGE CURRENT ≤1 mA)		2200V AC, 50Hz,1min.					
INSULATION RESISTANCE		≥100MΩ@500VDC					
MAXIMUM CONTACT VOLTAGE		900V DC					
RATED CONTACT CURRENT		100A	100A	100A	50A	50A	50A
AUX. CONTACT RATED LOAD		24V DC, 2A					
LIMIT BREAKING ABILITY		4Ie/5ms,1CYCLES					
ELECTRIC LIFE		3000 CYCLES(100A@450V DC)			6000 CYCLES(50A@450V DC)		
MECHANICAL LIFE		200,000 CYCLES					
WORKING DUTY		CONTINUOUS					

TABLE 2			
PRODUCT NUMBER	"A"	"B"	"C"
DCNHR100QF12	DCNHR100QF12	100A	12V DC
DCNHR100QF24	DCNHR100QF24	100A	24V DC
DCNHR100QF48	DCNHR100QF48	100A	48V DC
DCNHR50QF12	DCNHR50QF12	50A	12V DC
DCNHR50QF24	DCNHR50QF24	50A	24V DC
DCNHR50QF48	DCNHR50QF48	50A	48V DC

NOTES:
1. ALL SIZES ARE FOR REFERENCE ONLY.
2. MATERIALS AND FINISHING:
2.1 HOUSING: THERMOSETTING PLASTIC, UL94V-0.
2.2 CONTACTS: SILVER ALLOY.
3. PRODUCT PN AND NAMEPLATE CONFIGURATION RELATION SEE TABLE 2.
4. PRODUCT TECHNICAL PARAMETERS: SEE TABLE 1.
5. MAIN CONTACT ARRANGEMENT: SPST-NO.
6. AUXILIARY CONTACT ARRANGEMENT: SPST-NO.
7. CONNECTION BOLT: M5 BOLT, RECOMMENDED TORQUE 3 N•m ~ 4 N•m.
8. MOUNTING: M4 BOLT, RECOMMENDED TORQUE 1.7 N•m ~ 2.5 N•m.

DIMENSIONS ARE SHOWN IN MILLIMETERS. DIMENSIONS AND TOLERANCES ARE DEFINED ACCORDING TO ANSI/ASME Y14.5-1994.

PER CHI-NPD20-0008 PROCEDURE

●	FIT/ FUNCTION CRITICAL CHARACTERISTICS
<S>	SAFETY/ COMPLIANCE CRITICAL CHARACTERISTICS SYMBOL
CPK	DENOTES CPK DIMENSIONS MINIMUM CPK VALUE
ST	DENOTES A CHARACTERISTIC THAT PROVIDES AN INDICATION OF PROCESS PERFORMANCE.PROCEDURE FOR MEASUREMENTAND TRACKINGTO BE DEFINED IN LITTELFUSE INSPECTION INSTRUCTIONS
CP	DENOTES CP DIMENSIONS, -MINIMUM CP VALUE MUST BE WITHIN THE DIMENSIONAL LIMITATIONS SHOWN ON DRAWING AND INITIALLY LOCATED TO ALLOW FOR MAXIMUM TOOL LIFE

	NAME	DATE
DRAWN	MJ. DAI	AUG./25/2021
CHECKED	J. LI	AUG./30/2021
	-	-
	-	-

Littelfuse
Expertise Applied | Answers Delivered

FORM NO: CVP-PE40-0005 REV B

THIRD ANGLE PROJECTION

TITLE
DCNHR 100A HIGH VOLTAGE CONTACTOR WITH POLARITY AND AUXILIARY CONTACT

SIZE C | DWG. NO. OUTLINE OL-DCNHR100QF CHART | REV. A

DO NOT SCALE DRAWING | SCALE 1:1 | SHEET 1 OF 1